Work Order ID 61810

Tuesday, September 07, 2010 12:40:52 PM

Item ID: D4101-041 **Accept** **Setup Start** **Stop**

Revision ID:

Item Name: Pre-Flight Step Assembly 15

Start Date: 9/7/2010 **Start Qty:** ~~20.00~~ 15 u **Cust Item ID:**

Required Date: 10/13/2010 **Req'd Qty:** ~~20.00~~ **Customer:**

Reference:

Approvals: **Process Plan:** M **Date:** 10-9-07 **Tooling:** _____ **Date:** _____ **Run Start** **Stop**

QC: _____ **Date:** _____ **SPC (Y/N):** _____ **Date:** _____

Sequence ID/ Work Center ID	Operation Description	Set Up/ Run Hours	Tool ID	Tool #	Plan Code	Accept Qty	Reject Qty	Reject Number	Insp. Stamp
Draw Nbr / **Revision Nbr**: D4101 / B									
100		0.00							
Small Fab	**Memo**	0.00							
Small Fab	1- Assemble as per dwg								
110	QC5- Inspect part completeness to step on W/O	0.00							
QC	**Memo**	0.00							
Quality Control									
120	Identify as per dwg & Stock Location: 237A	0.00							
Packaging	**Memo**	0.00							
Packaging									

10/12/09 15

SB 10/12/09 15

10/12/09 15

Dart Aerospace Ltd

W/O:		WORK ORDER CHANGES					
DATE	**STEP**	**PROCEDURE CHANGE**	**By**	**Date**	**Qty**	**Approval** Chief Eng / Prod Mgr	**Approval** QC Inspector

Part No: _____ **PAR #:** _____ **Fault Category:** _____ **NCR:** Yes No **DQA:** _____ **Date:** _____

Resolution: _____ **Disposition:** _____ **QA: N/C Closed:** _____ **Date:** _____

NCR:		WORK ORDER NON-CONFORMANCE (NCR)						
DATE	**STEP**	**Description of NC** Section A	**Corrective Action** Section B			**Verification** Section C	**Approval** Chief Eng	**Approval** QC Inspector
			Initial Chief Eng	**Action Description** Chief Eng	**Sign & Date**			

NOTE: Date & initial all entries

Work Order ID 61810

Tuesday, September 07, 2010 12:40:52 PM

Item ID: D4101-041 **Accept** **Setup Start**

Revision ID: **Stop**

Item Name: Pre-Flight Step Assembly

Start Date: 9/7/2010 **Start Qty:** 20.00 **Cust Item ID:**

Required Date: 10/13/2010 **Req'd Qty:** 20.00 **Customer:**

Reference:

Approvals: **Process Plan:** _____ **Date:** _____ **Tooling:** _____ **Date:** _____ **Run Start**

QC: _____ **Date:** _____ **SPC (Y/N):** _____ **Date:** _____ **Stop**

Sequence ID/ Work Center ID	Operation Description	Set Up/ Run Hours	Tool ID	Tool #	Plan Code	Accept Qty	Reject Qty	Reject Number	Insp. Stamp
130	QC21- Final Inspection - Work Order Release	0.00					10/12/09		
QC	**Memo**	0.00							
Quality Control									

10-12-09

Dart Aerospace Ltd

W/O:		WORK ORDER CHANGES					
DATE	**STEP**	**PROCEDURE CHANGE**	**By**	**Date**	**Qty**	**Approval** Chief Eng / Prod Mgr	**Approval** QC Inspector

Part No: _____ **PAR #:** _____ **Fault Category:** _____ **NCR:** Yes No **DQA:** _____ **Date:** _____

Resolution: _____ **Disposition:** _____ **QA: N/C Closed:** _____ **Date:** _____

NCR:		WORK ORDER NON-CONFORMANCE (NCR)						
DATE	**STEP**	**Description of NC** Section A	**Corrective Action** Section B			**Verification** Section C	**Approval** Chief Eng	**Approval** QC Inspector
			Initial Chief Eng	**Action Description** Chief Eng	**Sign & Date**			

NOTE: Date & initial all entries

Picklist Print

Tuesday, September 07, 2010 12:40:57 PM

Work Order ID: 61810

Parent Item: D4101-041

Parent Item Name: Pre-Flight Step Assembly

Start Date: 9/7/2010 **Required Date:** 10/13/2010

Start Qty: 20.00 **Required Qty:** 20.00

Comments: IPP Rev:A 10.07.07 new issue DD verf:JLM

Component Item ID/ Item Name	Replacement Item ID	Mfg/ Purch	Bin Item	Primary Location	Last Location	Route Seq ID	Unit of Measure	Qty on Hand	Qty per Kit	Total Qty	Qty Issued	Date Issued	Status
AN310-4 NUT		Purchased	No			100	Each	32.0000	1	20			
				Location		**Loc Qty**		**Loc Code**					
				ST324		32							
					115107	32							
AN4-22 Bolt		Purchased	No			100	Each	9.0000	1	20			
				Location		**Loc Qty**		**Loc Code**					
				ST359		9							
					115156	9				8			
D4101-1 Bracket		Manufactured	No			100	Each	0.0000	1	20			
D4101-3 Step		Manufactured	No			100	Each	0.0000	1	20			
D4101-5 Spring		Manufactured	No			100	Each	0.0000	1	20			
MS24665-136 Cotter Pins		Purchased	No			100	Each	156.0000	1	20			
				Location		**Loc Qty**		**Loc Code**					
				ST309		156							
					2421	156				15			

10/12/09 M115936 (6x)

M116075 (9x)

10/12/09 M115669 (7x)

B61819 (15x) 10/12/09

B61820 (15x) 10/12/09

B61821 (15x) 10/12/09

10/12/09

Dart Aerospace Ltd

W/O:		WORK ORDER CHANGES					
DATE	**STEP**	**PROCEDURE CHANGE**	**By**	**Date**	**Qty**	**Approval** Chief Eng / Prod Mgr	**Approval** QC Inspector

Part No: _____ **PAR #:** _____ **Fault Category:** _____ **NCR:** Yes No **DQA:** _____ **Date:** _____

Resolution: _____ **Disposition:** _____ **QA: N/C Closed:** _____ **Date:** _____

NCR:		WORK ORDER NON-CONFORMANCE (NCR)						
DATE	**STEP**	**Description of NC** Section A	**Corrective Action** Section B			**Verification** Section C	**Approval** Chief Eng	**Approval** QC Inspector
			Initial Chief Eng	**Action Description** Chief Eng	**Sign & Date**			

NOTE: Date & initial all entries

Picklist Print

Tuesday, September 07, 2010 12:40:57 PM

Work Order ID: 61810

Parent Item: D4101-041

Parent Item Name: Pre-Flight Step Assembly

Start Date: 9/7/2010 **Required Date:** 10/13/2010

Start Qty: 20.00 **Required Qty:** 20.00

NAS1149D0416J Purchased No 100 Each 455.0000 2 40

Washer

N/A

10.12.08

Location	Loc Qty	Loc Code
ST298	455	
110153	2	
114103	50	
114884	200	
115107	164	
13910	39	

30

NAS1149D0463J Purchased No 100 Each 792.0000 2 40

Washer

EJS 10/12/09

Location	Loc Qty	Loc Code
ST297	672	
115000	672	
ST298	120	
10096	10	
112314	24	
114576	68	
114883	18	

M116289 (30x)

10.12.08 NAS1149D0432J qty 2 B# M112557 (16x) M114718 (14x) EJS 10/12/09

AN525-832R6 qty 1 B# ~~M112278~~ (15x) M112557 EJS 10/12/09

MS21209C0815 qty 1 B# M110440 (15x) EJS 10/12/09

Dart Aerospace Ltd

W/O:		WORK ORDER CHANGES					
DATE	**STEP**	**PROCEDURE CHANGE**	**By**	**Date**	**Qty**	**Approval** Chief Eng / Prod Mgr	**Approval** QC Inspector

Part No: _____ **PAR #:** _____ **Fault Category:** _____ **NCR:** Yes No **DQA:** _____ **Date:** _____

Resolution: _____ **Disposition:** _____ **QA: N/C Closed:** _____ **Date:** _____

NCR:		WORK ORDER NON-CONFORMANCE (NCR)						
DATE	**STEP**	**Description of NC** Section A	**Corrective Action** Section B			**Verification** Section C	**Approval** Chief Eng	**Approval** QC Inspector
			Initial Chief Eng	**Action Description** Chief Eng	**Sign & Date**			

NOTE: Date & initial all entries

SHOP COPY
RETURN TO
ENGINEERING
UNCONTROLLED COPY
SUBJECT TO AMENDMENT
WITHOUT NOTICE
WORK ORDER
NO. 61810
RS10-9-07

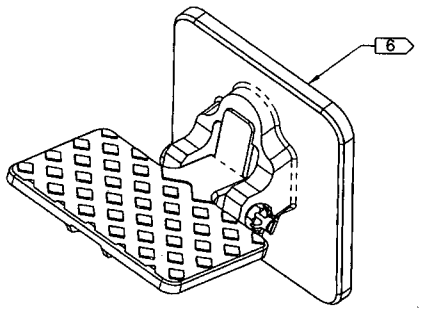

ITEM	QTY -041	PART NUMBER	DESCRIPTION
1	X	D4101-041	PRE-FLIGHT STEP ASSEMBLY
2	1	D4101-1	BRACKET
3	1	D4101-3	STEP
4	1	D4101-5	SPRING
5	1	AN4-22	BOLT
6	2	NAS1149D0432J	WASHER
7	2	NAS1149D0463J	WASHER
8	1	AN310-4	NUT
9	1	MS24665-136	COTTER PIN
10	1	AN525-832R6	SCREW
11	1	MS21209C0815	HELICOIL

B

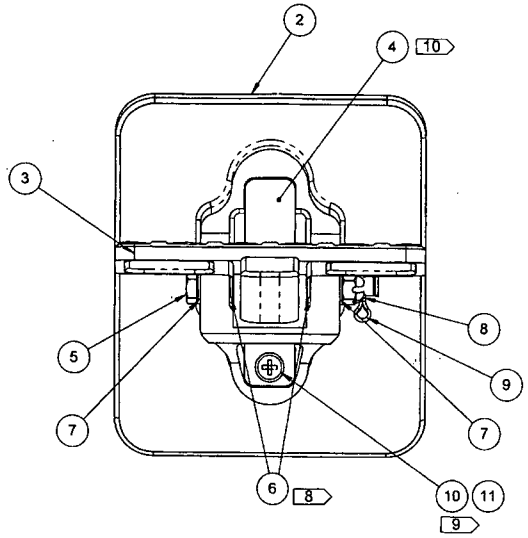

D4101-041 PRE-FLIGHT STEP ASSEMBLY

RELEASED
2010 -08- 23

NOTES:
1) MATERIAL: N/A
2) FINISH: NONE
3) TOLERANCES: PER DART QSI 018 UNLESS OTHERWISE NOTED
4) UNITS: INCHES UNLESS OTHERWISE NOTED
5) BREAK SHARP EDGES: NONE
6) IDENTIFICATION: IDENTIFY WITH DART P/N "D4101-041" USING FINE POINT PERMANENT INK MARKER BACK SURFACE
7) WEIGHT: 1.18 lbs
8) INSTALL NAS1149D0432J WASHER IN BETWEEN STEP AND BRACKET MATING FACES
9) TORQUE AN525832R SCREW TO 15-25 in-lb
10) TEXTURED SIDE TO BOTTOM

REV.	DESCRIPTION	BY	DATE
B	NAS1149D0432J WAS NAS1149D0416J (ZN D3-1); ADD SCREW AND HELICOIL (ZN D3-1& B1-3); RE-DESIGN D4101-5 (ZN B4-5)	RF	10.08.05
A	NEW ISSUE	RF	10.07.12

DESIGN	RF	**DART AEROSPACE LTD** HAWKESBURY, ONTARIO, CANADA
DRAWN	RF	
CHECKED		DRAWING NO. D4101 REV. B
MFG. APPR.		SHEET 1 OF 5
APPROVED		TITLE PRE-FLIGHT STEP ASSEMBLY SCALE NTS
DE APPR.		
DATE	10.08.05	

COPYRIGHT © 2010 BY DART AEROSPACE LTD
THIS DOCUMENT IS PRIVATE AND CONFIDENTIAL AND IS SUPPLIED ON THE EXPRESS CONDITION THAT IT IS NOT TO BE USED FOR ANY PURPOSE OR COPIED OR COMMUNICATED TO ANY OTHER PERSON WITHOUT WRITTEN PERMISSION FROM DART AEROSPACE LTD.

Dart Aerospace Ltd

W/O:		WORK ORDER CHANGES					
DATE	**STEP**	**PROCEDURE CHANGE**	**By**	**Date**	**Qty**	**Approval** Chief Eng / Prod Mgr	**Approval** QC Inspector

Part No: _____ **PAR #:** _____ **Fault Category:** _____ **NCR:** Yes No **DQA:** _____ **Date:** _____

Resolution: _____ **Disposition:** _____ **QA: N/C Closed:** _____ **Date:** _____

NCR:		WORK ORDER NON-CONFORMANCE (NCR)						
DATE	**STEP**	**Description of NC** Section A	**Corrective Action** Section B			**Verification** Section C	**Approval** Chief Eng	**Approval** QC Inspector
			Initial Chief Eng	**Action Description** Chief Eng	**Sign & Date**			

NOTE: Date & initial all entries

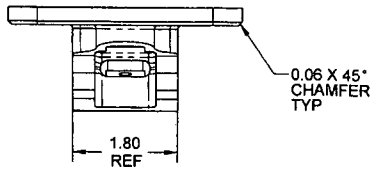

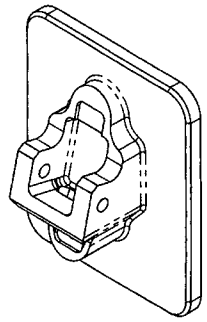

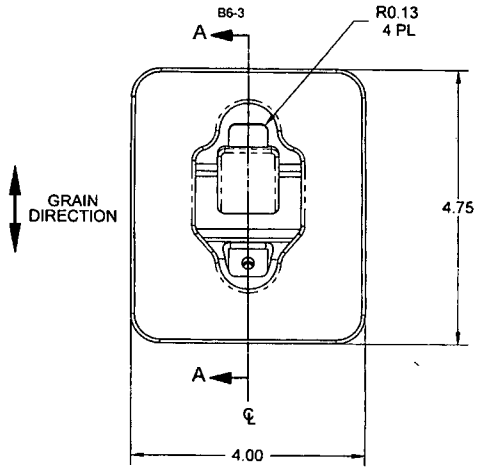

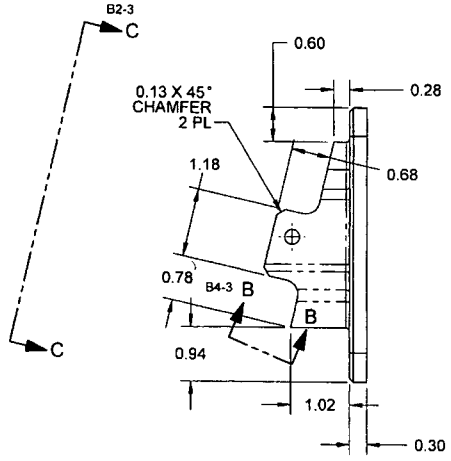

WO 41810

RELEASED
2010 -08- 23

D4101-1 BRACKET

NOTES:
1) MATERIAL: 6061-T6/T651/T6510/T6511/T62 ALUMINUM BAR
PER QQ-A-225/8 OR AMS-QQ-A-225/8 (OR AMS 4117/4128/4115/4116)
OR QQ-A-200/8 OR AMS-QQ-A-200/8 (OR AMS 4160)
OR ASTM B211 OR ASTM B221
2) FINISH: CHEMICAL CONVERSION COAT PER DART QSI 005 4.1
3) TOLERANCES: PER DART QSI 018 UNLESS OTHERWISE NOTED
4) UNITS: INCHES UNLESS OTHERWISE NOTED
5) BREAK SHARP EDGES: 0.005 TO 0.010 MAX
6) IDENTIFICATION: N/A
7) WEIGHT: 0.85 lbs

DESIGN	RF	**DART AEROSPACE LTD**
DRAWN	RF	HAWKESBURY, ONTARIO, CANADA
CHECKED		DRAWING NO. D4101 REV. B
MFG. APPR.		SHEET 2 OF 5
APPROVED		TITLE PRE-FLIGHT STEP ASSEMBLY SCALE NTS
DE APPR.		
DATE	10.08.05	

COPYRIGHT © 2010 BY DART AEROSPACE LTD
THIS DOCUMENT IS PRIVATE AND CONFIDENTIAL AND IS SUPPLIED ON THE EXPRESS CONDITION THAT IT IS NOT TO BE USED FOR ANY PURPOSE OR COPIED OR COMMUNICATED TO ANY OTHER PERSON WITHOUT WRITTEN PERMISSION FROM DART AEROSPACE LTD

Dart Aerospace Ltd

W/O:		WORK ORDER CHANGES					
DATE	**STEP**	**PROCEDURE CHANGE**	**By**	**Date**	**Qty**	**Approval** Chief Eng / Prod Mgr	**Approval** QC Inspector

Part No: _____ **PAR #:** _____ **Fault Category:** _____ **NCR:** Yes No **DQA:** _____ **Date:** _____

Resolution: _____ **Disposition:** _____ **QA: N/C Closed:** _____ **Date:** _____

NCR:		WORK ORDER NON-CONFORMANCE (NCR)						
DATE	**STEP**	**Description of NC** Section A	**Corrective Action** Section B			**Verification** Section C	**Approval** Chief Eng	**Approval** QC Inspector
			Initial Chief Eng	**Action Description** Chief Eng	**Sign & Date**			

NOTE: Date & initial all entries

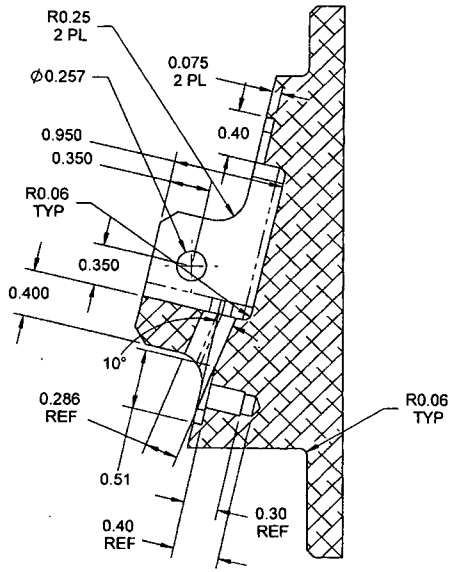

SECTION A-A C7-2
SCALE 2X

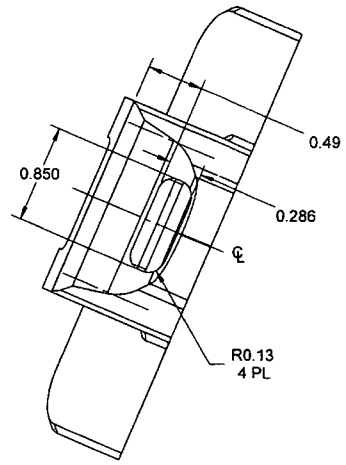

VIEW B-B C4-2
SCALE 2X

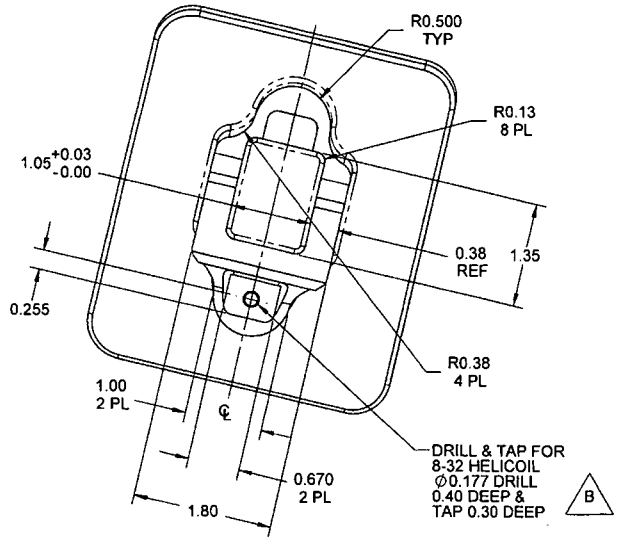

VIEW C-C D4-2
SCALE X1.5

w/o 41810

RELEASED
2010 -08- 23

DESIGN	RF	**DART AEROSPACE LTD**
DRAWN	RF	HAWKESBURY, ONTARIO, CANADA
CHECKED		DRAWING NO. REV. B
MFG. APPR.		D4101 SHEET 3 OF 5
APPROVED		TITLE SCALE
DE APPR.		PRE-FLIGHT STEP ASSEMBLY NTS
DATE	10.08.05	

COPYRIGHT © 2010 BY DART AEROSPACE LTD
THIS DOCUMENT IS PRIVATE AND CONFIDENTIAL AND IS SUPPLIED ON THE EXPRESS CONDITION THAT IT IS NOT TO BE USED FOR ANY PURPOSE OR COPIED OR COMMUNICATED TO ANY OTHER PERSON WITHOUT WRITTEN PERMISSION FROM DART AEROSPACE LTD

Dart Aerospace Ltd

W/O:		WORK ORDER CHANGES					
DATE	**STEP**	**PROCEDURE CHANGE**	**By**	**Date**	**Qty**	**Approval** Chief Eng / Prod Mgr	**Approval** QC Inspector

Part No: _____ **PAR #:** _____ **Fault Category:** _____ **NCR:** Yes No **DQA:** _____ **Date:** _____

Resolution: _____ **Disposition:** _____ **QA: N/C Closed:** _____ **Date:** _____

NCR:		WORK ORDER NON-CONFORMANCE (NCR)						
DATE	**STEP**	**Description of NC** Section A	**Corrective Action** Section B			**Verification** Section C	**Approval** Chief Eng	**Approval** QC Inspector
			Initial Chief Eng	**Action Description** Chief Eng	**Sign & Date**			

NOTE: Date & initial all entries

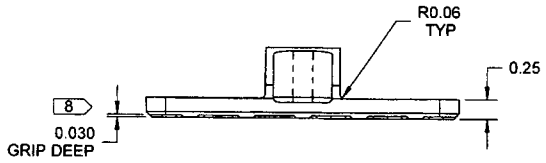

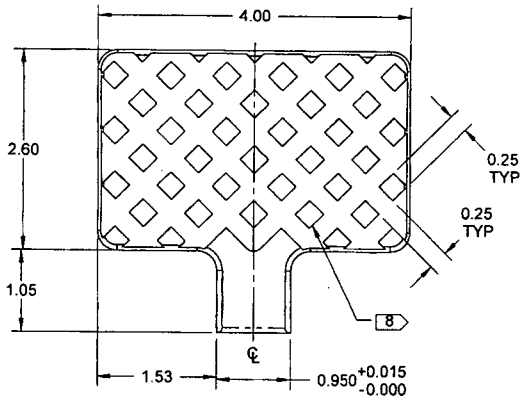

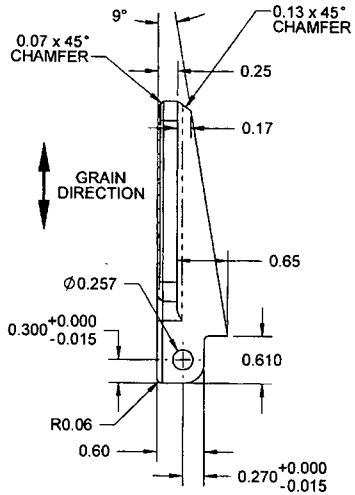

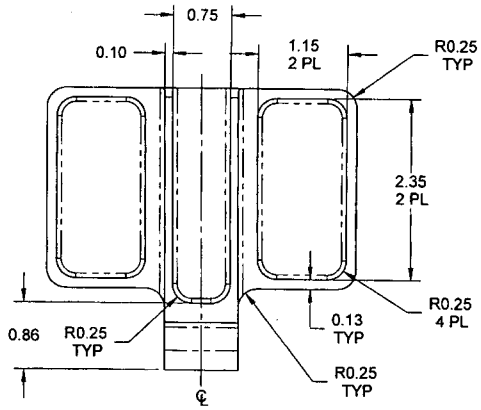

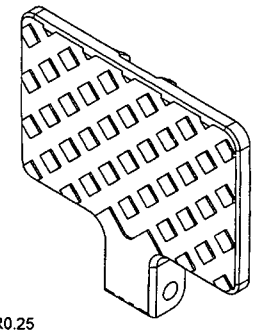

D4101-3 STEP

W0 41810

RELEASED
2010 -08- 23

NOTES:
1) MATERIAL: 6061-T6/T651/T6510/T6511/T62 ALUMINUM BAR
PER QQ-A-225/8 OR AMS-QQ-A-225/8 (OR AMS 4117/4128/4115/4116)
OR QQ-A-200/8 OR AMS-QQ-A-200/8 (OR AMS 4160)
OR ASTM B211 OR ASTM B221
2) FINISH: CHEMICAL CONVERSION COAT PER DART QSI 005 4.1
3) TOLERANCES: PER DART QSI 018 UNLESS OTHERWISE NOTED
4) UNITS: INCHES UNLESS OTHERWISE NOTED
5) BREAK SHARP EDGES: 0.005 TO 0.010 MAX
6) IDENTIFICATION: NONE
7) WEIGHT: 0.27 lbs
8) MACHINE 0.25 x 0.25 GRIP 0.030 DEEP AT 45° PATTERN 0.25 APART

DESIGN	RF	DART AEROSPACE LTD HAWKESBURY, ONTARIO, CANADA
DRAWN	RF	
CHECKED		DRAWING NO. D4101 REV. B
MFG. APPR.		SHEET 4 OF 5
APPROVED		TITLE PRE-FLIGHT STEP ASSEMBLY SCALE NTS
DE APPR.		
DATE 10.08.05		

COPYRIGHT © 2010 BY DART AEROSPACE LTD
THIS DOCUMENT IS PRIVATE AND CONFIDENTIAL AND IS SUPPLIED ON THE EXPRESS CONDITION THAT IT IS NOT TO BE USED FOR ANY PURPOSE OR COPIED OR COMMUNICATED TO ANY OTHER PERSON WITHOUT WRITTEN PERMISSION FROM DART AEROSPACE LTD

Dart Aerospace Ltd

W/O:		WORK ORDER CHANGES					
DATE	**STEP**	**PROCEDURE CHANGE**	**By**	**Date**	**Qty**	**Approval** Chief Eng / Prod Mgr	**Approval** QC Inspector

Part No: _____ **PAR #:** _____ **Fault Category:** _____ **NCR:** Yes No **DQA:** _____ **Date:** _____

Resolution: _____ **Disposition:** _____ **QA: N/C Closed:** _____ **Date:** _____

NCR:		WORK ORDER NON-CONFORMANCE (NCR)						
DATE	**STEP**	**Description of NC** Section A	**Corrective Action** Section B			**Verification** Section C	**Approval** Chief Eng	**Approval** QC Inspector
			Initial Chief Eng	**Action Description** Chief Eng	**Sign & Date**			

NOTE: Date & initial all entries

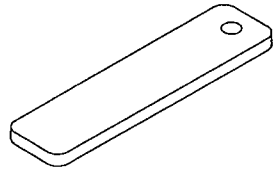

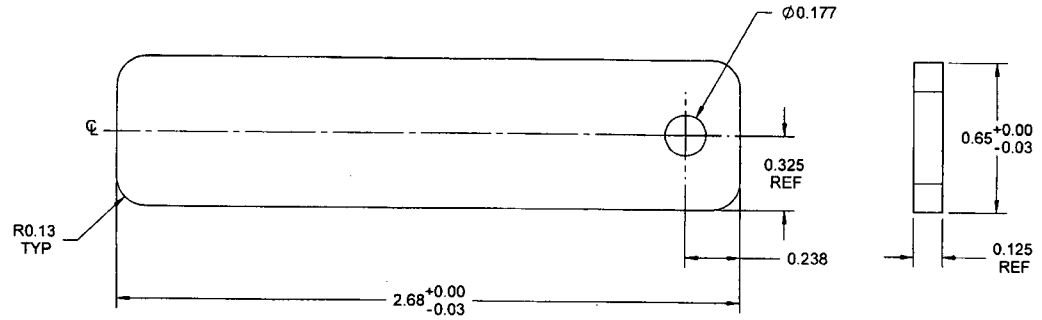

D4101-5 SPRING B

w/o 41810

RELEASED 2010-08-23

NOTES:
1) MATERIAL: F60029-GY3778 DARK GREY LEXAN SHEET (HEAVY HAIRCELL TEXTURE) 0.125 THICK
REF DART SPEC MLEXS.125-F60029-04
2) FINISH: N/A
3) TOLERANCES: PER DART QSI 018 UNLESS OTHERWISE NOTED
4) UNITS: INCHES UNLESS OTHERWISE NOTED
5) BREAK SHARP EDGES: 0.005 TO 0.010 MAX
6) IDENTIFICATION: NONE
7) WEIGHT: 0.01 lbs

DESIGN	RF	**DART AEROSPACE LTD** HAWKESBURY, ONTARIO, CANADA
DRAWN	RF	
CHECKED		DRAWING NO. D4101 — REV. B — SHEET 5 OF 5
MFG. APPR.		
APPROVED		TITLE PRE-FLIGHT STEP ASSEMBLY — SCALE NTS
DE APPR.		
DATE	10.08.05	

COPYRIGHT © 2010 BY DART AEROSPACE LTD
THIS DOCUMENT IS PRIVATE AND CONFIDENTIAL AND IS SUPPLIED ON THE EXPRESS CONDITION THAT IT IS NOT TO BE USED FOR ANY PURPOSE OR COPIED OR COMMUNICATED TO ANY OTHER PERSON WITHOUT WRITTEN PERMISSION FROM DART AEROSPACE LTD.

Dart Aerospace Ltd

W/O:		WORK ORDER CHANGES					
DATE	**STEP**	**PROCEDURE CHANGE**	**By**	**Date**	**Qty**	**Approval** Chief Eng / Prod Mgr	**Approval** QC Inspector

Part No: _____ **PAR #:** _____ **Fault Category:** _____ **NCR:** Yes No **DQA:** _____ **Date:** _____

Resolution: _____ **Disposition:** _____ **QA: N/C Closed:** _____ **Date:** _____

NCR:		WORK ORDER NON-CONFORMANCE (NCR)						
DATE	**STEP**	**Description of NC** Section A	**Corrective Action** Section B			**Verification** Section C	**Approval** Chief Eng	**Approval** QC Inspector
			Initial Chief Eng	**Action Description** Chief Eng	**Sign & Date**			

NOTE: Date & initial all entries